HDMI 1 x 8 Splitter
- ID# 15130

Operation Manual

CONVERTERS.TV

Introduction

This 1 by 8 HDMI Splitter can split and distribute a single HDMI input into up to 8 identical HDMI outputs without any loss of quality. It supports a wide range of HDMI features including high definition video and lossless audio, 3D, and 12-bit Deep Color

Features

- Supports HDTV resolutions up to 1080p60 and PC resolutions up to WUXGA (1920×1200 Reduced Blanking)
- HDMI and HDCP compliant
- Supports up to 12-bit Deep color
- Supports up to 7.1 channels of high definition audio: LPCM, Dolby Digital, Dolby Digital Plus, Dolby TrueHD, DTS, and DTS-HD Master Audio transmission (32~192 kHz Fs sample rate)
- Supports 3D signals
- Supports HDMI input cable lengths of up to 15 meters (8-bit)/10 meters (12-bit) and HDMI output cable lengths of 15 meters (8-bit)/10 meters (12-bit)
- Cascades up to 3 layers
- Power and Input Sync LED indicators
- Locking power supply unit
- EDID setting switch

Applications

- Simultaneously display an HDMI source on up to 16 display
- Showroom display
- Retail sales display
- Digital signage display

System Requirements

- Source equipment with HDMI output
- Displays (TV/Projector/monitor) or AV Receiver with HDMI input

CONVERTERS.TV

Operation Controls and Functions

Front Panel

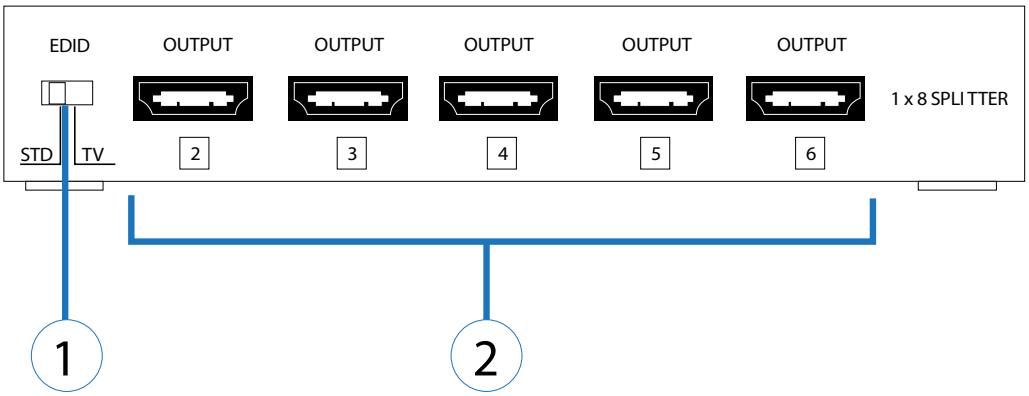

Back Panel

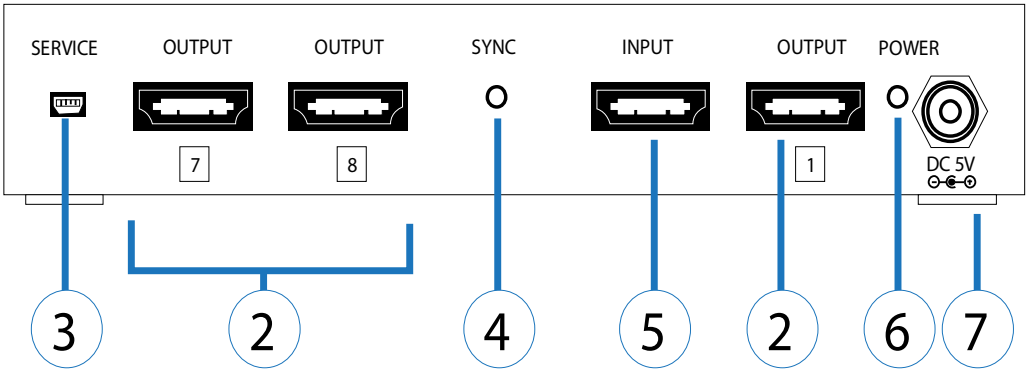

1. **EDID:**The default setting is TV. When in this mode, the unit will detect the EDID settings of the display connected to OUTPUT 1 and record them in the unit's memory. If there are any audio or video issues then switch the unit to STD mode and power cycle it. The Splitter will scan all connected displays and provide the highest common settings
2. **HDMI OUTPUT [1~8]:** Connect each of the HDMI outputs to HDMI displays for simultaneous HDMI distribution
3. **SERVICE:** Manufacturer use only
4. **SYNC LED:** The LED will illuminate when the HDMI source signal is connected to the input port.
5. **HDMI INPUT:** Connect the input port to the HDMI or DVI output (using a DVI to HDMI adaptor) of your source equipment such as DVD/Blu-ray player, game console, or set-top box.
6. **POWER LED**: The power LED will illuminate when the unit is powered.
7. **DC 5V**: Connect the 5V DC power supply into the splitter and Plug the adaptor to AC wall outlet.

CONVERTERS.TV

Connection Diagram

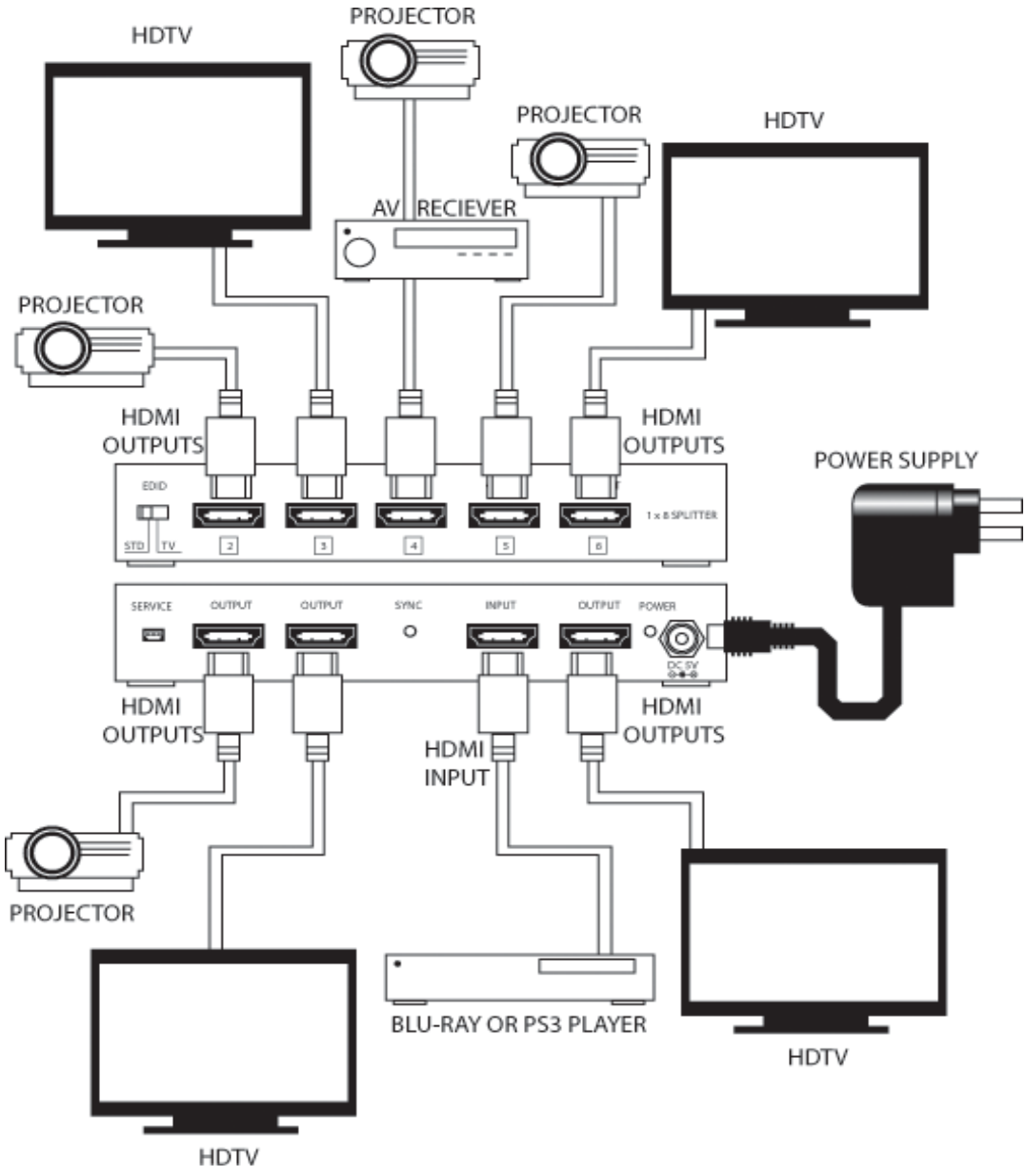

Specifications

Video Bandwidth	225 MHz/6.75 Gbps
Input Ports	1×HDMI (Female), 1×USB (Service only)
Output Ports	8×HDMI (Female)
Output Resolution	480i ~ 1080p@24/50/60 up to 12-Bit Color Depth, and VGA ~ WUXGA(RB)
HDMI Input Cable	15m (1080p 8-bit)/10m (1080p 12-bit)
HDMI Output Cable	15m (1080p 8-bit)/10m (1080p 12-bit)
Power Supply	5 V/6 A DC (US/EU standards, CE/FCC/UL certified), Locking Type, center positive
ESD Protection	Human body model: ±8kV (air-gap discharge) ±4kV (contact discharge)
Dimensions	436 mm (W)×120 mm (D)×49 mm (H)
Weight	2000 g
Chassis Material	Metal
Color	Black
Operating Temperature	0°C ~ 40°C/32°F ~ 104°F
Storage Temperature	−20°C ~ 60°C / −4°F ~ 140°F
Relative Humidity	20 ~ 90 % RH (non-condensing

CONVERTERS.TV