PC VGA to TV Video Converter - Ultimate XP Pro ID# 520

Operation Manual

CONVERTERS.TV

Introduction

PC VGA to TV Video Converter - Ultimate XP Pro is a VGA to Video converter allowing your PC images to be viewed on a standard TV screen, HDTV and Progressive Scan TV. Record movies from your PC using VCR's or DVD's. The PC VGA to TV Video Converter - Ultimate XP Pro will support resolutions up to UXGA (1600x1200) and can be output via Composite or S-Video, RGB (Scart) and YUV/Cb/Cr connections. Ideal for Professions like Advertising, Academic Lecturers, Retail Businesses or just for Home use, the PC VGA to TV Video Converter - Ultimate XP Pro has simple and easy to use controls.

Features

1. Pure hardware design, just Plug and Display, no software driver required.
2. Supports resolution up to 1600 x 1200.
3. Power from USB or PS/2 port, No need power adaptor.
4. Simultaneous display on TV and VGA monitor.
5. Supports VIDEO, S-VIDEO or RGB & Y.Cb.Cr video outputs by switch change.
6. Simultaneous RGB and VIDEO output signal on RGB out connector.
7. 24 bit, true color digitizer.
8. Panel Button supports Power, Save, Fine Tune, PAL/NTSC, Zoom, Menu and Position control function.
9. Y.Cb.Cr output supports all the interlace format which includes YUV,Y.Cb.Cr, Y.Pb.Pr.
10. PAL/NTSC button supports NTSC, NTSC-EIAJ, PAL-M, PAL-N, PAL, PAL-COMBINATION-N.
11. MENU button supports Freeze, Horizontal SIZE (H-SIZE), Vertical SIZE (V-SIZE), Brightness, Contrast, Hue, Saturation, Flicker, OSD color & Reset.
12. LED indicator : Power.
13. Independent Horizontal Size and Vertical Size adjustment, programmable 2D scaling.
14. 64 stages output Brightness, output Contrast, output Hue, output Saturation adjustment.
15. 16 stages FINE TUNE (Sharpness), Flicker adjustment.
16. Remote Controller supports POWER, VIDEO STANDARD, Position control, RESET, MENU, FREEZE, ZOOM adjustment.
17. On Screen Display (OSD) operation status.

18. Save the setting when you press the SAVE button.

Modes and Resolution Table:

This converter supports the following VGA display modes:

Resolution	720 x 400	640 x 480	800 x 600	1024 x 768	1152 x 864	1280 x 960	1280 x 1024	1600 x 1200
Vertical Frequency (Hz)	70	60, 70, 72, 75, 85, 100, 120	56, 60, 70, 72, 75, 85, 100	60, 70, 72,75	60, 70, 72,75	60	60	60

This converter supports the following MAC display modes(for MAC G4,G4 Cubic, G3):

Resolution	640 x 480	832 x 624	800 X 600	1024 X 768	1152 X 864
Vertical Frequency(Hz)	60,66,72,75,85,100,120	75	56,60,72, 75,85,100	60,70,75	60,70

This converter fully supports APPLE iMac and iMAC DV computer display modes:

Resolution	640x480	800x600	1024x768
Vertical frequency (Hz)	117	95	75

CONVERTERS.TV

Operating Functions and Controls

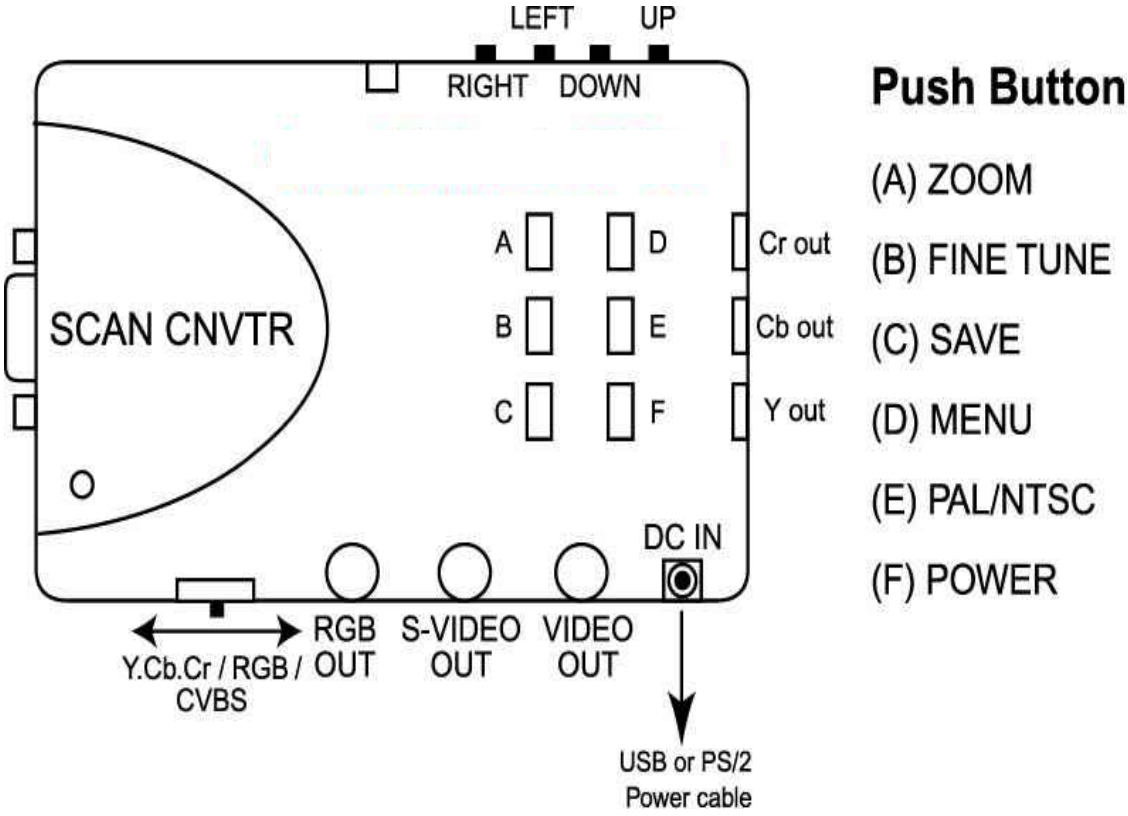

FIG.1

1. **DC IN : Plug with USB or PS/2 power cable.**
2. **VIDEO OUT :** Connects PC VGA to TV Video Converter - Ultimate XP to the VIDEO input of TV、VCR or Video projector.
3. **S-VIDEO OUT :** Connects PC VGA to TV Video Converter - Ultimate XP to your TV、VCR or Video projector supporting the S-VIDEO input.
4. **RGB OUT (SCART) :** Connects PC VGA to TV Video Converter - Ultimate XP to the RGB input of TV、VCR or Video projector.
5. **CVBS/RGB/ Y.Cb.Cr Switch:** Slide to **RGB** side, only **RGB OUT** connector has function, slide to **CVBS** side, only **S-OUT** and **VIDEO OUT** connector can output signal, slide to **Y.Cb.Cr** switch, only **Y.Cb.Cr** connector has function.

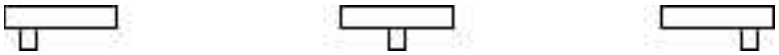

SELECT YCbCr **SELECT RGB(SCART)** **SELECT CVBS**

1. **SCAN CNVTR :** Connects **Y Cable** among PC, PC VGA to TV Video Converter - Ultimate XP and monitor.
1. **Y.Cb.Cr OUT** : Connect s the Y.Cb.Cr to Y.Cb.Cr cable to your TV supporting Y.Cb.Cr Input like HDTV or PROGRESSIVE SCAN TV.

Buttons

1. **POWER (Button F of FIG: 1.) :** Toggle between power on & off.
2. **SAVE (Button C of FIG: 1.):** Press this button to save customer setting.
3. **PAL/NTSC (Button E of FIG 1.):** This button selects the video standard. Which includes the following six video standards, "**NTSC, NTSC-EIAJ, PAL-M, PAL-N, PAL, PAL combination N**". The refresh rate of **NTSC, NTSC-EIAJ** and **PAL-M** is 60Hz. The refresh rate of **PAL-N, PAL** and **PAL combination N** is 50Hz.
4. **FINE TUNE (Button B of FIG 1.) :** Press this to fine-tune the video image. (the same as sharpness)
5. **MENU (Button D of FIG 1.) :** Press this button to cyclically activate the functions. The functions are Freeze, Horizontal SIZE (H-SIZE), Vertical SIZE (V-SIZE), Brightness, Contrast, Hue, Saturation, Flicker, OSD color & Reset.
6. **ZOOM (Button A of FIG 1.) :** Toggle between Zoom and Normal display.
7. **UP, DOWN , LEFT, RIGHT (Button UP, DOWN, LEFT and RIGHT of FIG 1.):** Press up, down, left & right button to adjust the position of the TV display.

Remote Control

- **POWER :** Toggle between power on & off.

- **VIDEO STANDARD:** Press this button to select your video system. It supports NTSC, NTSC-EIAJ, PAL-M, PAL-N, PAL, PAL-COMBINATION-N.

- **MENU :** Press this button to cyclically activate the functions. These functions are Fine Tune, H-SIZE, V-SIZE Brightness, Contrast, Hue, Saturation, Flicker, OSD color & Save.

- **ZOOM :** Toggle between Zoom and Normal display.

- **RESET:** Press this button will reset the picture to factory setting.

- **FREEZE:** Toggle between Freeze and Normal display.

- **POSITION buttons:** Press up, down, left & right

UP DOWN LEFT RIGHT

button to adjust the position of the TV display. These buttons also are used to make adjustments to the setting in the MENU

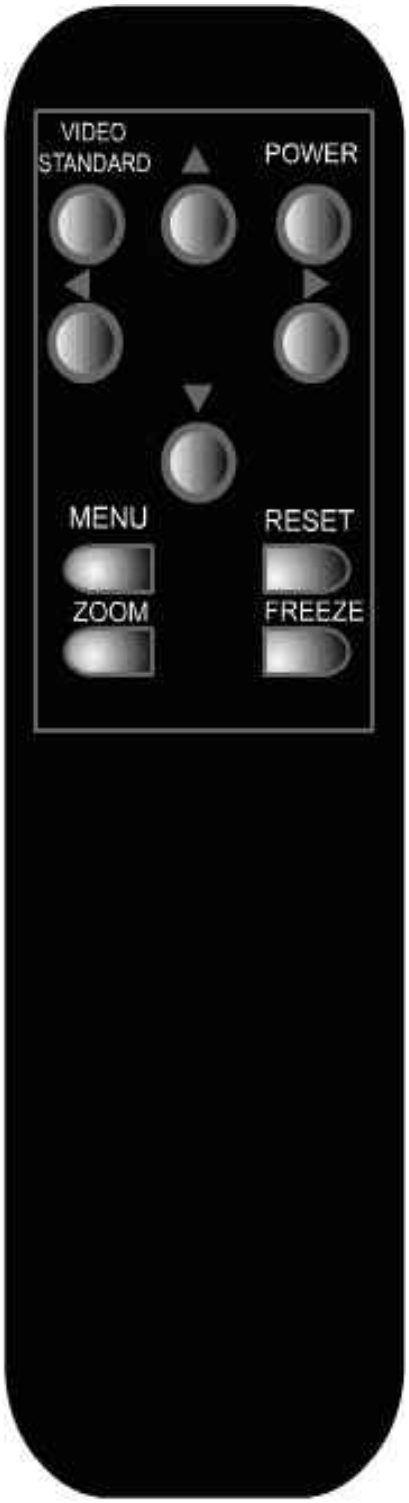

CONVERTERS.TV

Installation for

IBM PC Users

The PC VGA to TV Video Converter - Ultimate XP is a "**Plug and Display"** video converter. The only thing required to get the image of computer on TV is to make the proper connection. Please read the following sections carefully for the installation of the hardware. Please refer to Fig.2 for the installation for IBM PC Users.

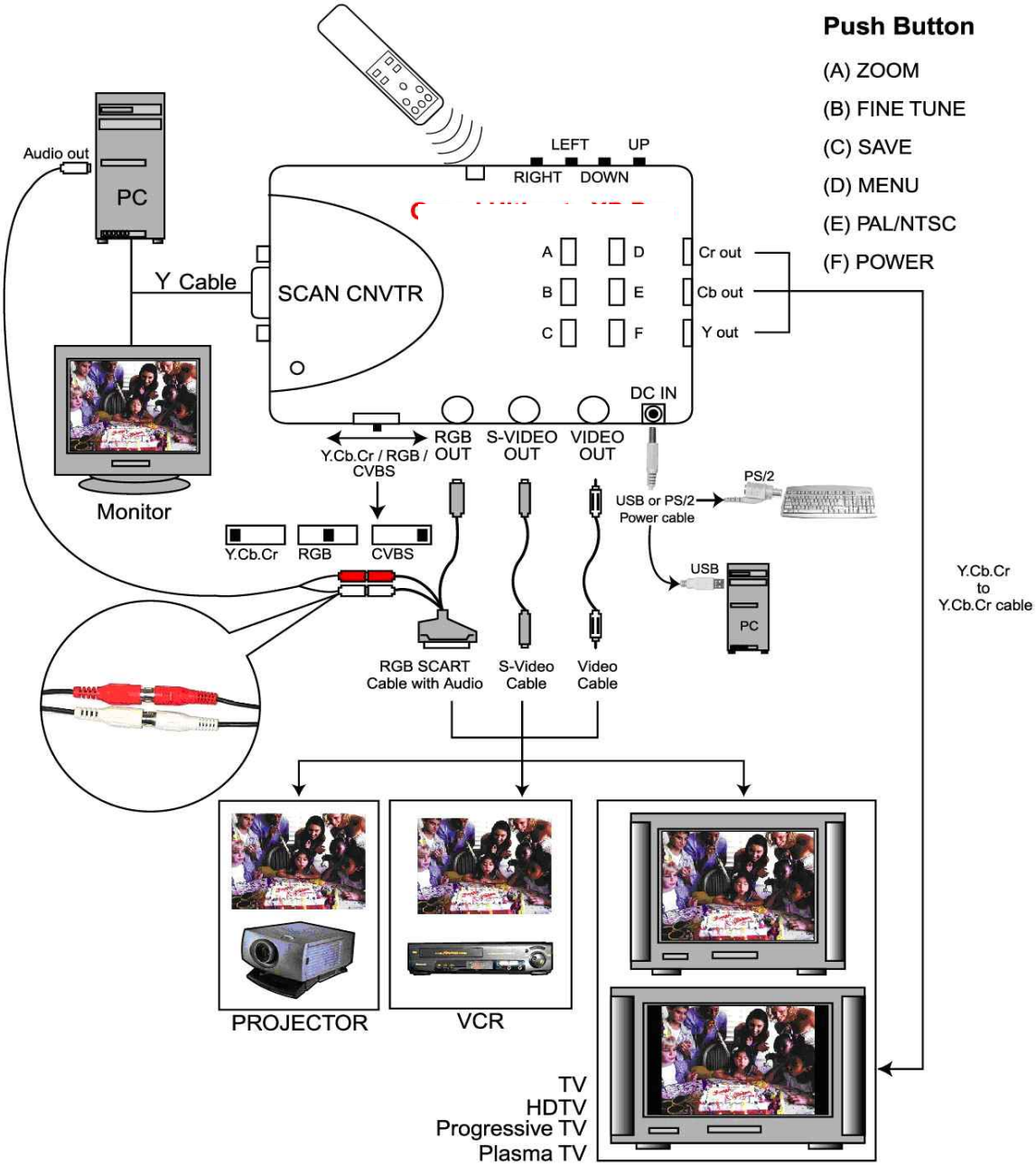

FIG. 2

1. Make sure your computer's (laptop, notebook or desktop PC) power is turned **OFF**.

2. Connect the **Y Cable for IBM PC** among computer's **VGA output,** converter's **VGA IN** and **VGA monitor.** Please connect the Y Cable mark "**PC**" to your computer's VGA output, connect the Y Cable mark with red color "**SCAN CNVTR**" to PC VGA to TV Video Converter - Ultimate XP's SCAN CNVTR and connect the Y Cable mark with "**MONITOR**" to VGA monitor.

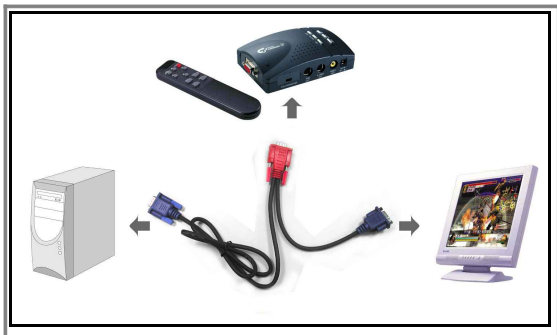	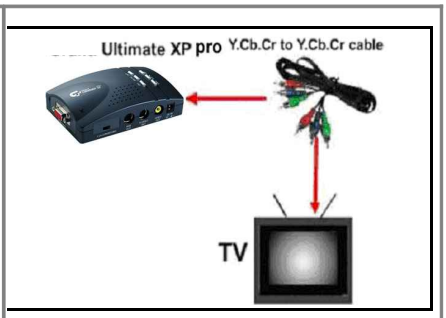
Please connect the Y Cable carefully as above connecting drawing otherwise it will cause you much inconvenience.	Please connect the Y.Cb.Cr to Y.Cb.Cr cable as above connecting drawing.

3. With the supplied video cable, connect to the converter's **VIDEO OUT** to your TV or VCR video input.

Note: PC VGA to TV Video Converter - Ultimate XP also supports high quality S-OUT, RGB SCART and YCbCr OUT connector. If your TV or VCR support S-VIDEO IN or RGB VIDEO IN or YCbCr input connector, we highly recommended you to use it to get the best TV picture.

4. Connect one end of the supplied USB or PS/2 power cable to the DC IN port on the PC VGA to TV Video Converter - Ultimate XP and connect the other end to your PC.
5. Power on your PC.
6. Power on the PC VGA to TV Video Converter - Ultimate XP.
7. Turn on your TV or VCR, and select the input from VIDEO IN, then you can get the picture on TV.

1. POP SOUND : To select the "AUDIO OUT" from "AV AUDIO IN" or "PC AUDIO IN"

2. POP MOVE : Press ↑ / ↓ / ← / → button to move the POP

Technical Tips

The following are problems that might arise when using the PC to TV converter, and possible solutions of them.

Q: How can I enhance the display quality?

A: You can usually lower the TV contrast and sharpness control at the best position, you can get a very good picture. To have the best effect, lower the contrast control to minimize the flicker effect.

Q: I connect with a NOTEBOOK PC, no output is displayed on TV.

A: Check your computer hardware operating manual to enable the VGA port or "OUTPUT".(Many Notebook computers have 3 settings, VGA external only, VGA internal only, and VGA internal & external simultaneously)

Q: Can I use multiple televisions to view the same image from my computer?

A: Yes, you may connect one television to the next using a composite video cable or an S-Video between the "**VIDEO IN"** and "**VIDEO OUT"** ports. We recommend using no more than six televisions because of signal degradation.

Trouble Shooting

Check the following before requesting service.

Symptom	Point to check
No LED light	1. Check the power cable for proper connection to DC IN or USB port.
No TV output	1.Press the video select or AV button of the TV to select the video Input from the PC VGA to TV Video Converter - Ultimate XP. 2.If the signal of the PC VGA to TV Video Converter - Ultimate XP goes through a VCR first, set the input option to external video for the VCR.
Text not sharp	1. Use S-Video or SCART connection.

Ghost image	1. If long cable is used to connect the PC VGA to TV Video Converter - Ultimate XP to a TV, use a better 75 ohm coaxial cable. (RG-59 is recommended) 2. Adjust Sharpness of TV.
Missing characters	1.Set the PC VGA to TV Video Converter - Ultimate XP to underscan. 2.Adjust horizontal and vertical position button to the center screen. 3.Adjust the H SIZE and V SIZE.
Flicker	1. Adjust the Flicker or V SIZE of the PC VGA to TV Video Converter - Ultimate XP.
No color	1.Toggle the video standard button to match your TV system. 2.Make sure the color (also called saturation for some TVs) setting is not minimum. 3. If your TV is multi-standard, set the standard to AUTO or the same as that output from the PC VGA to TV Video Converter - Ultimate XP.
Distorted lines	1. Reduce the brightness level of the TV. If problem persists, choose a better TV model.
Jitter	1. Press the FINE TUNE Button to get the smooth picture. Please refer to the figure below.